Chromatopolis

THE COLOR WHEEL CITY

MARS CITY DESIGN

URBAN DESIGN & ARCHITECTURE

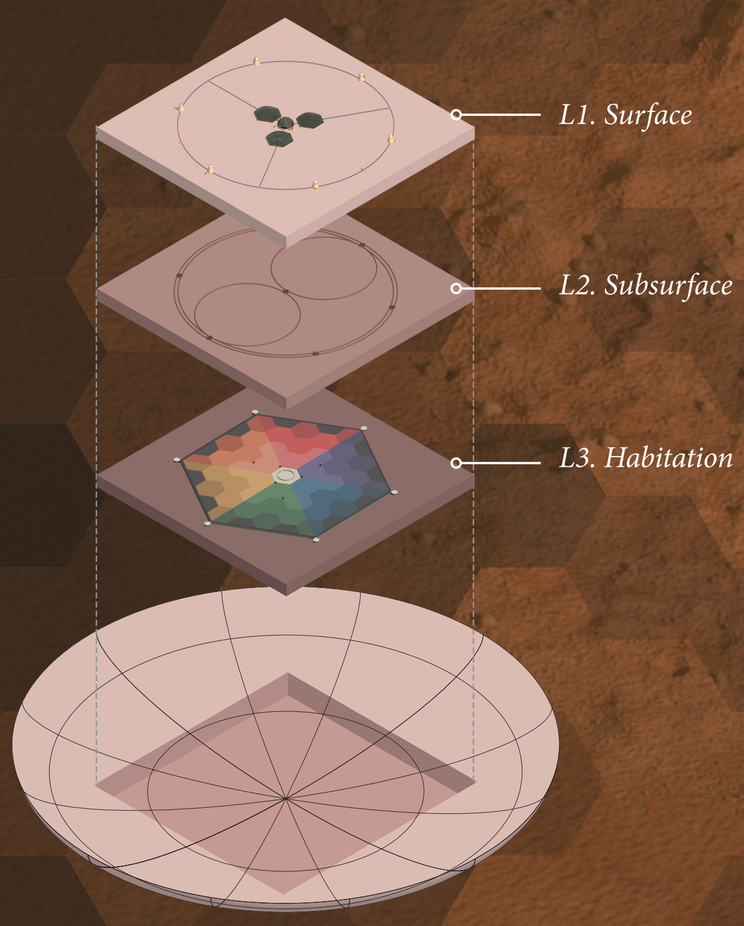

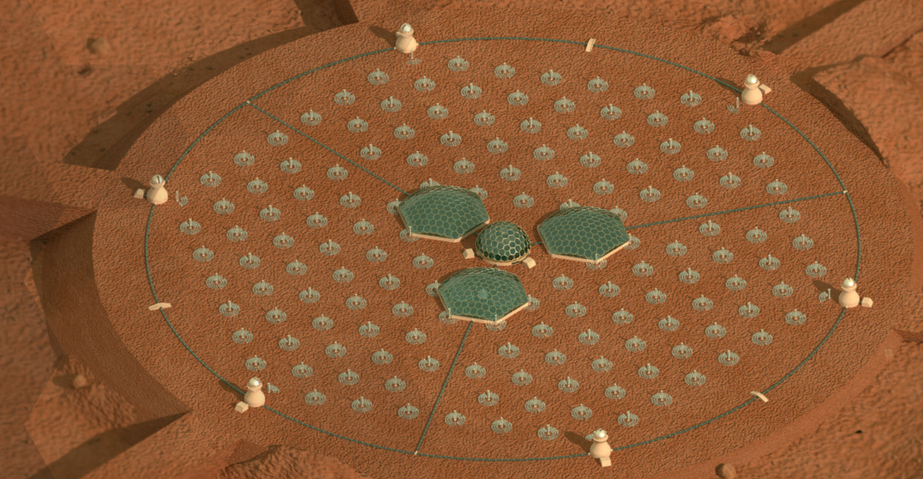

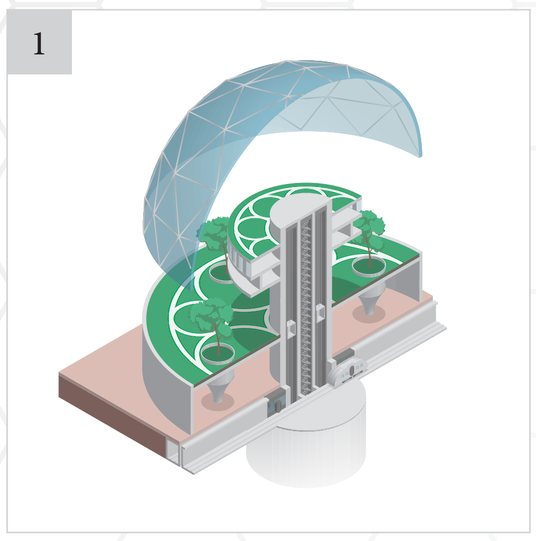

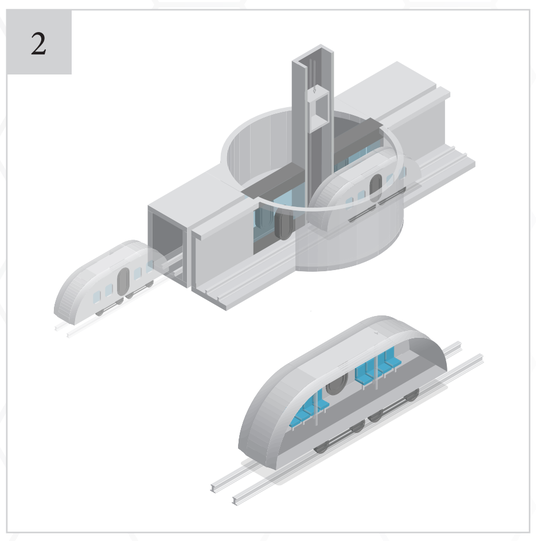

A Vibrant, Chromatic Community on the Red Planet

The Chromatopolis is a Martian colony design concept approximately 1km in diameter and consisting of three general layers, built in the trough of a crater 1-2km in diameter. Debris from the crater rim is excavated to build ramps out of the crater, and then used to bury the lower two layers in regolith (protecting colonists from solar and cosmic radiation). The *L1 Surface* layer is distinguished by a central hemispherical dome, three peripheral hexagonal domes, an outer ring of observatory towers, and a series of tubular walkways connecting all structures. The *L2 Subsurface* layer is distinguished by a rapid-transit hyperloop system traveling between stations on the outer observatory ring and central dome. The *L3 Habitation* layer is distinguished by a series of hexagonal chromatic districts, all zoned for particular functions. L3 is a highly planned, self-sustaining, and egalitarian community in which residents have equal-sized living, work, and play areas, while avoiding disorientation with a simple color coding and iconographic system, allowing residents to intuit their location quickly and easily at all times.

The importance of lighting in Martian structures cannot be overstated. While the history of lighting on Earth demonstrates the wasteful human notion that "brighter is better," this architectural design mistake doesn't have to be repeated on Mars. The majority of people on Earth live in cities where light pollution has cost us our ability to see stars, our connection to the cosmos. With the Chromatopolis leading by example via solar periscopes, fiber optics, beam splitters, bioluminescense, and other novel techniques to successfully manage wasteful and damaging light pollution, a movement to parallel these efforts and reduce light pollution and energy waste on Earth may gain momentum.

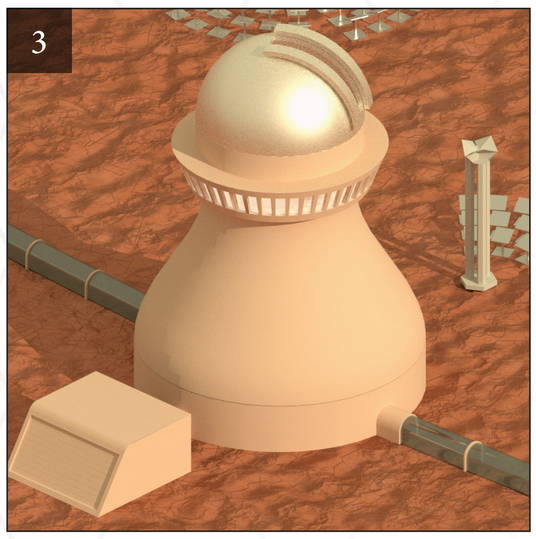

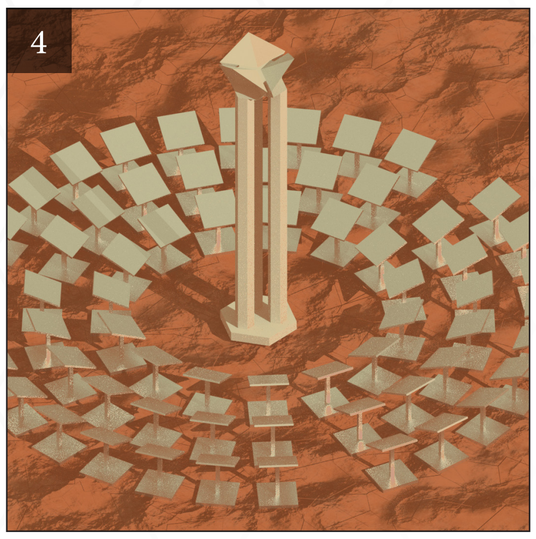

1. CENTRAL DOME CROSS SECTION
   The central dome serves as the focal point of the L1 Surface features. Towering above the surrounding landscape, the dome complex contains a well-maintained above-ground garden and rotating observation deck with 360º view of the landscape.

2. HYPERLOOP CAR & STATION
   Rapid transit within the colony takes place in the L2 Subsurface layer, between the other layers of the colony. Taking advantage of the natural near-vacuum present on Mars and the chilly surface temperatures, the magnetic-levitation Hyperloop is well-suited to meet the transportation needs of the colony (alongside self-driving golf carts, bike rental stations, etc.)

3. OBSERVATORY TOWERS
   Around the edges of the colony on the L1 Surface level are six observatory towers with telescopes built to take advantage of the thinner and less turbulent Martian atmosphere, as well as the lack of any light pollution. The Observatory towers feed into Hyperloop stations and Habitation layer below.

4. SOLAR PERISCOPES
   Solar periscopes harvest light from the sun via reflectors, then concentrate that light in focusing towers that redirect the light to interior spaces within the colony using fiber optics and beam splitters. Lighting within the colony originates from both natural and artificial sources, and is generally lower intensity than on Earth to acclimatize residents to Martian conditions.

5. AQUAPONICS BAYS & GARDENS
   Sprinkled throughout the colony in locations both above- and below-ground are a number of integrated gardens and water features. In addition to purely aesthetic benefits, many of these water features also incorporate Bioluminescent plants and agitated algae for light and oxygen generation (image: Adrien Girod)

6. SURFACE RECREATION AREAS
   Because buried elements on L3 will require many interior support columns and walls to support the weight of regolith above, wide open, unencumbered spaces will be built on the surface under hexagonal domes to house playing fields, parks, and more.

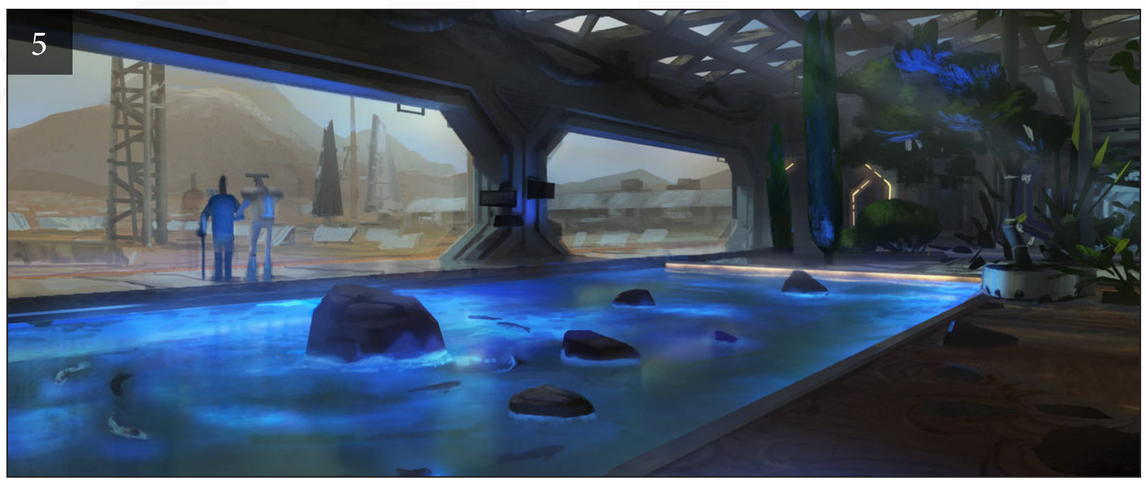

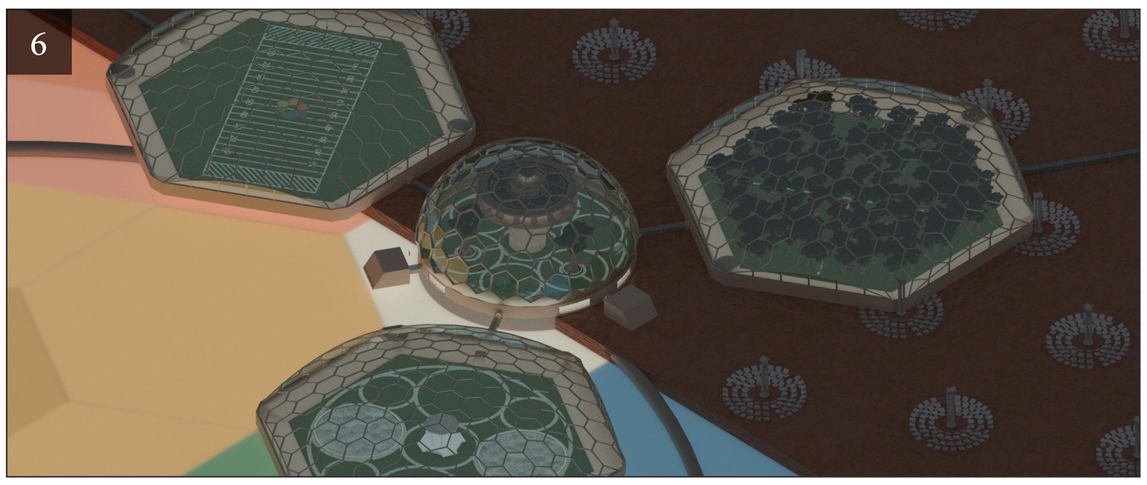

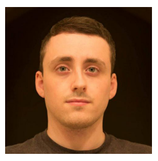

MATT FINLAY – *(matt@finlay.info)*

Matt Finlay is a writer, designer, and artist. He attended Carnegie Mellon University, where he was the President of the CMU Astronomy Club for three years, and graduated in 2014 with a degree in Creative Writing. His fascination with astronomy began at the spectacular perihelion of Hale-Bopp comet in 1997. Matt currently works as a Senior Designer at a mobile security startup in San Antonio, TX, where he develops branding, collateral, and visual-literary narratives.

DIANE TURNSHEK – *(dianet@andrew.cmu.edu)*

Diane Turnshek is an astronomer in the Dept. of Physics at Carnegie Mellon University and the University of Pittsburgh. She publishes hard sci-fi with a focus on space colonization and first contact. In 2012, Diane crewed the Mars Desert Research Station (near Bryce Canyon, UT) where she turned her attention to dark-sky advocacy. Diane received the Dark-Sky Defender award in 2015 from the International Dark-Sky Association for her contribution to light pollution mitigation.